info@violainedharcourt.com
(+351) 911 843 560
violainedharcourt.com

Frame

Introducing our Frames Collection, a collection of handcrafted wall sconces, featuring a minimalist design, simple forms, and the subtle interplay of paper with raw materials, available in different sizes.

Type	Wall Light
Frame	Size S



info@violainedharcourt.com
(+351) 911 843 560
violainedharcourt.com

Technical Drawings

Hardwired

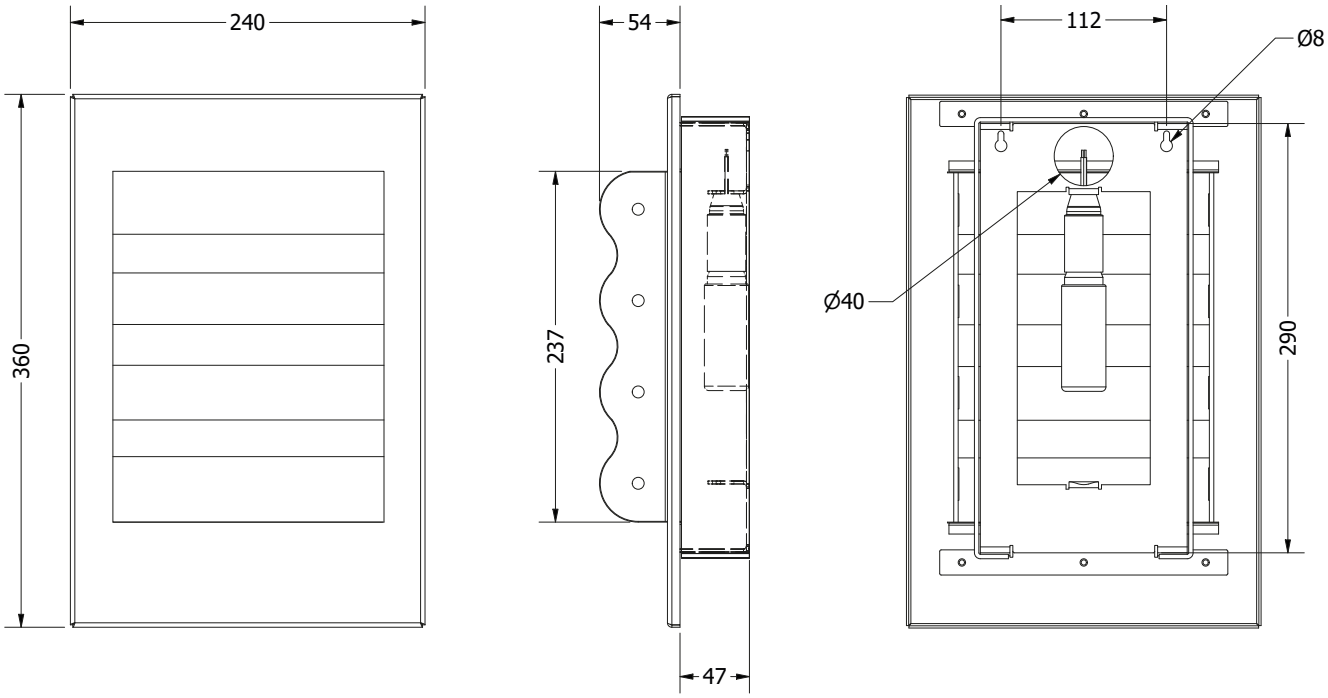

Technical Specifications

Materials	**Frame** Brushed / Lacquered Steel or Veneered Wood **Shade** Acrylic Diffuser
Dimensions	**Size S** H 360mm x W 240mm x D 101mm
Product Weight	**Size S** 1.2 kg
Light Installation	Hardwired
Bulb provided	Socket E14 LED bulb 12W / Voltage 220-240V
Lighting	2700K-3000K / 1350 lumens / 30,000 hours Non-dimmable
Certifications	CE-Certified components, Non CE-listed
Notes	Dimmable bulb on demand
Possible Finishes	Brut – Brushed Steel Black – Black Lacquered Steel Brun – Marron Lacquered Steel OW – Off White Lacquered Steel Miroir – Mirror Polished Steel Wood – Mahogany Vennered Wood

info@violainedharcourt.com
(+351) 911 843 560
violainedharcourt.com

Technical Drawings

Plug-in

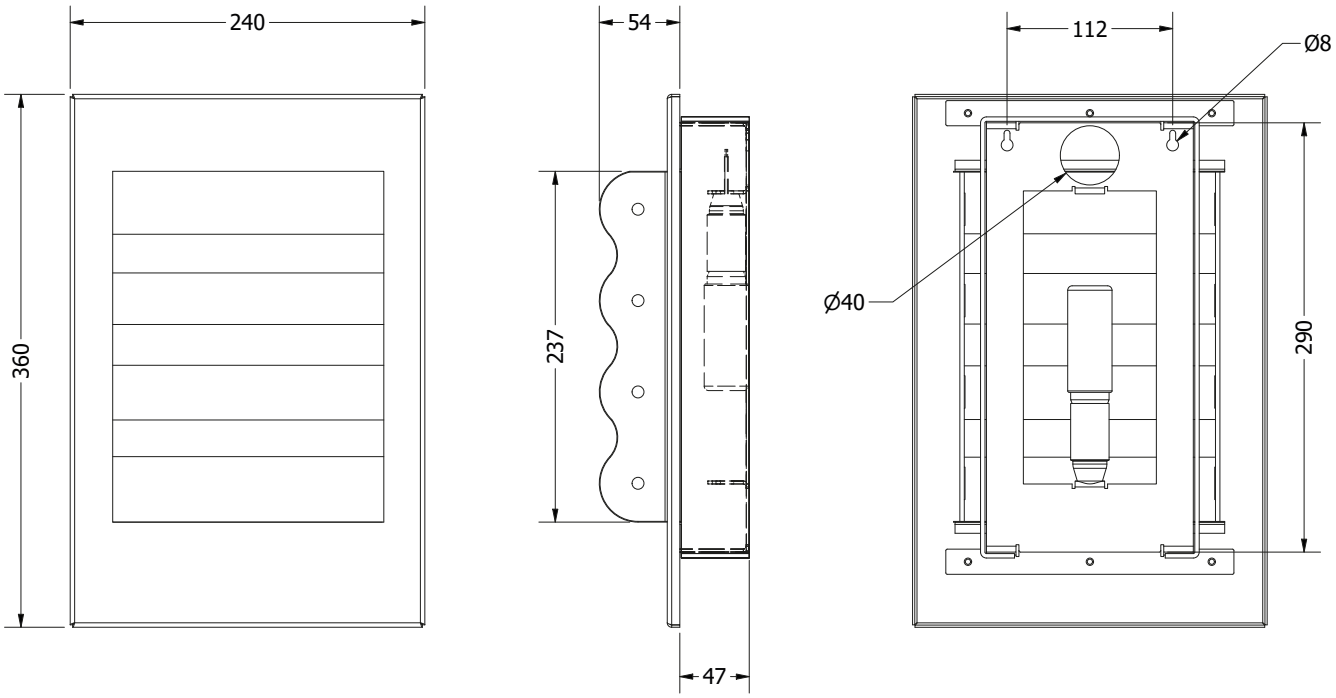

Technical Specifications

Materials	**Frame** Brushed / Lacquered Steel or Veneered Wood **Shade** Acrylic Diffuser
Dimensions	**Size S** H 360mm x W 240mm x D 101mm
Product Weight	**Size S** 1.2 kg
Light Installation	Plug-in
Bulb provided	Socket E14 LED bulb 12W / Voltage 220-240V
Lighting	2700K-3000K / 1350 lumens / 30,000 hours Non-dimmable
Certifications	CE-Certified components, Non CE-listed
Notes	Dimmable bulb on demand Wire 2200mm with switch
Possible Finishes	Brut – Brushed Steel Black – Black Lacquered Steel Brun – Marron Lacquered Steel OW – Off White Lacquered Steel Miroir – Mirror Polished Steel Wood – Mahogany Vennered Wood